L1
1812LS-823XKBC
R1
10 1W
5%
L2
+270V
270VRTN
L3B
L3A
L4A
L4B
C2
0.47
275VAC
CR1
RHRP1560
C3
0.47
275VAC
X1
275VAC
+Vin
C1
0.1
275VAC
gnd_earth3
C4
0.1
275VAC
R109
330
1W
5%
+VIN
+VBB
R2
100K
1/8W
1%
R132
100K
1/8W
1%
R133
100K
1/8W
1%
R134
100K
1/8W
1%
C78
0.001
50V
R136
1K
1/8W
1%
U15A
IL206AT
R147
4.99K
1/10W
1%
C86
0.001
50V
Q17
MMBT2907ALT1
R153
10K
1/10W
1%
R158
5.11M
1/10W
1%
U14
TL1431
R169
10K
1/10W
0.1%
R135
10K
1/10W
0.1%
VR8
51V
+Vin
CR42
MURS160T3
U12
LR9904
VIN VOUT
ADJ
R5
1K
1/10W
1%
SM
Q20
FDN359AN
R131
15.4K
1/10W
1%
R15
10K
1/10W
1%
VR5
6.2V
VR1
1.5KE200CA
CR2
UPR20
SM
CR3
UPR20
SM
CR6
UPR20
SM
T1B
CSM2010-071
T1D
CSM2010-071
C5
100pF
100V
SM
CR4
UPR20
SM
CR5
UPR20
SM
CR7
UPR20
SM
+Vcc
C7
.1
100V
SM
C6
120
25V
+Vbb
R7
10K
SM
R8
10K
SM
C8
.1
50V
SM
R9
4.32K
SM
R12
2.49K
SM
COMP VREF
VFB VCC
ISENSE OUT
RT/CT GND
U1
UC1844AJ
C11
.0022
100V
SM
C10
470pF
100V
SM
C12
.1
50V
SM
C13
4.7
50V
CR8
UPR20
SM
CR9
UPR20
SM
CR11
UPS5819
SM
C14
39
25V
R10
47.5
1/8W SM
R11
47.5
1/8W SM
CSM2010-071
Q1
STP6NB90
R13
475
SM
CR10
UPS5819
SM
R17
4.75
1/8W
1%
R16
51.1K
SM
R18
4.75
1/8W
1%
SM
T1A
T1C
CSM2010-071
VR2
18V
INTERNAL BIAS

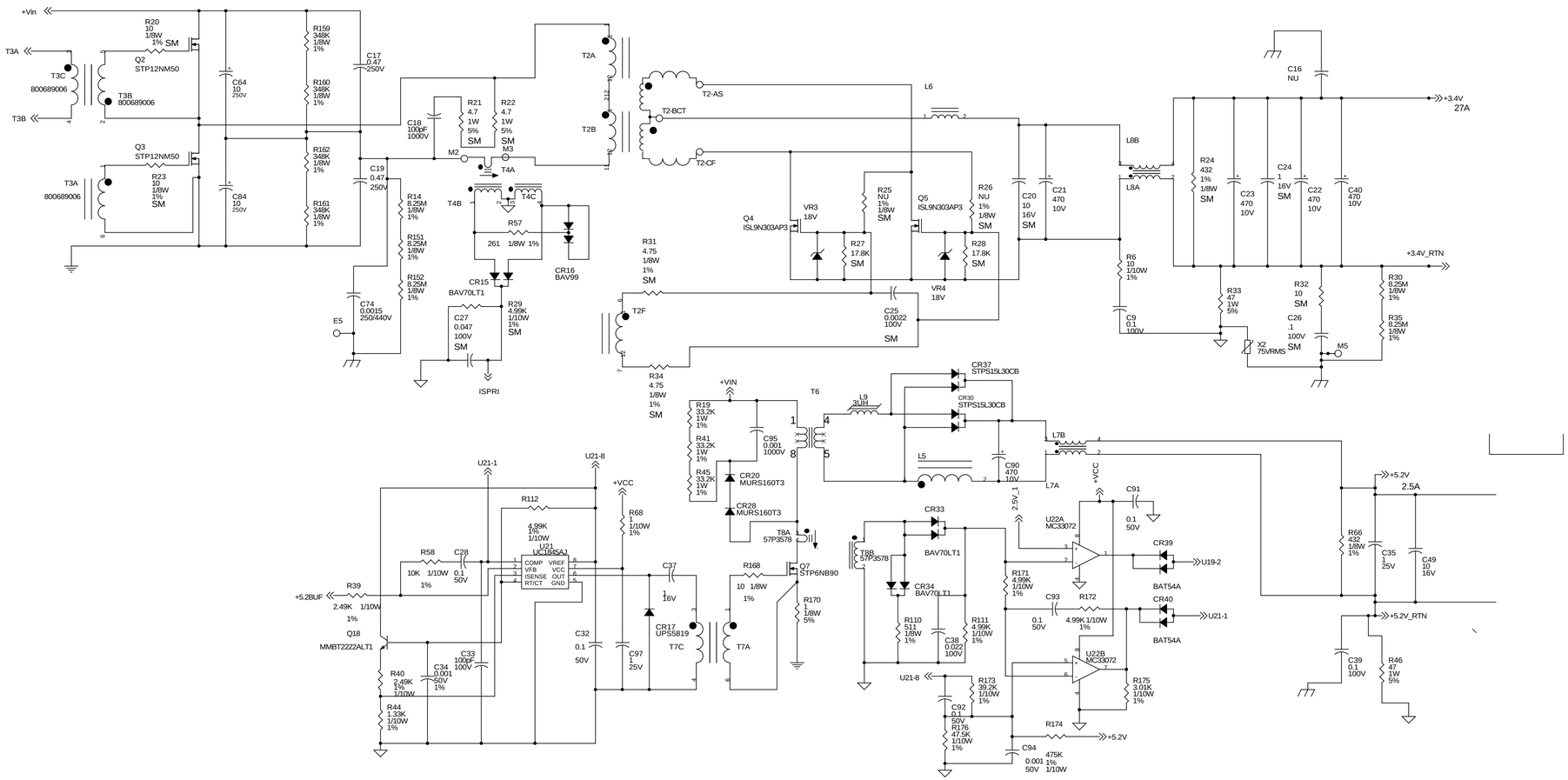
+Vin
T3A
T3C
800689006
T3B 800689006
T3B
R20 10 1/8W 1% SM
Q2 STP12NM50
Q3 STP12NM50
R23 10 1/8W 1% SM
C64 10 250V
C84 10 250V
R159 348K 1/8W 1%
R160 348K 1/8W 1%
R162 348K 1/8W 1%
R161 348K 1/8W 1%
C17 0.47 250V
C18 100pF 1000V
C19 0.47 250V
R21 4.7 1W 5% SM
R22 4.7 1W 5% SM
M2
M3
T4A
T4B
T4C
R57 261 1/8W 1%
CR15 BAV70LT1
CR16 BAV99
R29 4.99K 1/10W 1% SM
C27 0.047 100V SM
ISPRI
R14 8.25M 1/8W 1%
R151 8.25M 1/8W 1%
R152 8.25M 1/8W 1%
C74 0.0015 250/440V
E5
T2A
T2B
T2-AS
T2-BCT
T2-CF
L6
R31 4.75 1/8W 1% SM
T2F
R34 4.75 1/8W 1% SM
Q4 ISL9N303AP3
VR3 18V
R27 17.8K SM
R25 NU 1% 1/8W SM
Q5 ISL9N303AP3
R26 NU 1% 1/8W SM
R28 17.8K SM
VR4 18V
C25 0.0022 100V SM
C20 10 16V SM
C21 470 10V
L8B
L8A
R6 10 1/10W 1%
C9 0.1 100V
C16 NU
+3.4V 27A
R24 432 1/8W 1% SM
C23 470 10V
C24 1 16V SM
C22 470 10V
C40 470 10V
+3.4V_RTN
R33 47 1W 5%
X2 75VRMS
R32 10 SM
C26 .1 100V SM
M5
R30 8.25M 1/8W 1%
R35 8.25M 1/8W 1%
+VIN
R19 33.2K 1W 1%
R41 33.2K 1W 1%
R45 33.2K 1W 1%
C95 0.001 1000V
CR20 MURS160T3
CR28 MURS160T3
T6
L9 3UH
CR37 STPS15L30CB
CR30 STPS15L30CB
L5
C90 470 10V
L7B
L7A
2.5V_1
+VCC
C91 0.1 50V
U21-1
U21-8
R112 4.99K 1% 1/10W
U21 UC1845AJ
COMP VREF
VFB VCC
ISENSE OUT
RT/CT GND
R58 10K 1/10W 1%
C28 0.1 50V
R68 1 1/10W 1%
R39 2.49K 1/10W 1%
+5.2BUF
Q18 MMBT2222ALT1
R40 2.49K 1/10W 1%
R44 1.33K 1/10W 1%
C33 100pF 100V
C34 0.001 50V 1%
C37 1 16V
C32 0.1 50V
C97 1 25V
CR17 UPS5819
T7C
T7A
T8A 57P3578
R168 10 1/8W 1%
Q7 STP6NB90
R170 1 1/8W 5%
T8B 57P3578
CR33 BAV70LT1
CR34 BAV70LT1
R110 511 1/8W 1%
C38 0.022 100V
R111 4.99K 1/10W 1%
U21-8
R173 39.2K 1/10W 1%
C92 0.1 50V
R176 47.5K 1/10W 1%
C94 0.001 50V
R174 475K 1% 1/10W
+5.2V
U22A MC33072
U22B MC33072
R171 4.99K 1/10W 1%
C93 0.1 50V
R172 4.99K 1/10W 1%
CR39 BAT54A
CR40 BAT54A
U19-2
U21-1
R175 3.01K 1/10W 1%
+5.2V
2.5A
R66 432 1/8W 1%
C35 1 25V
C49 10 16V
+5.2V_RTN
C39 0.1 100V
R46 47 1W 5%

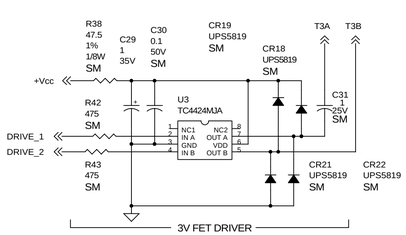
R38 47.5 1% 1/8W SM
C29 1 35V
C30 0.1 50V SM
CR19 UPS5819 SM
CR18 UPS5819 SM
T3A
T3B
+Vcc
R42 475 SM
U3 TC4424MJA
NC1 NC2
IN A OUT A
GND VDD
IN B OUT B
C31 1 25V SM
DRIVE_1
DRIVE_2
R43 475 SM
CR21 UPS5819 SM
CR22 UPS5819 SM
3V FET DRIVER

3.3V AUTOMATIC PRE-LOAD
3.3V PWM
3.3V CURRENT LIMIT
OV PROTECTION
U10
UC1525B
U7A
MC33072
U7B
MC33072
U11A
MC33072
U11B
MC33072
Q6
FDR4420A
Q9
MMBT2222ALT1
Q19
MMBT2907ALT1
Q8
FDN359AN BAV70LT1
CR26
BAV70LT1
CR31
BAT54C
CR27
BAT54C
U9
LM4050CEM3-2.5
M10
R64
NOT USED
R65
NOT USED
R93
JUMPER
R56
2.49K
R61
34K
R60
4.99K
R63
47.5
R53
12
R54
12
R55
12
R36
2.49K
R70
10
R71
1
R72
10K
R69
10K
R67
4.32K
R81
10K
R82
100K
R87
2.49K
R88
5.76K
R89
23.7
R84
4.99K
R62
.047
R73
34K
R74
243K
R75
2.49K
R92
39.2K
R85
4.99K
R86
2.49K
R77
4.99K
R78
4.99K
R79
4.99K
R106
576
R83
1.33K
R91
1.1K
R90
1K
R80
20.5K
R59
20.5K
R94
10K
R97
10K
R96
10K
R99
10K
R105
10K
R100
10K
R101
10K
R103
10K
R104
10K
C52
0.001
C53
0.01
C54
0.47
C55
.001
C58
1
C59
0.1
C60
1
C61
0.1
C62
.047
C63
470pF
C67
.1
C73
0.1
C56
0.1
C57
0.1
C66
100V
C51
0.001
C36
0.001
C41
Not Used
C42
Not Used
C69
0.1
C70
0.001
C72
0.001
C87
0.001
C88
0.001
CR13
U10_9
U21-1
DRIVE_1
DRIVE_2
+3.4V_RTN
+Vcc
+3.4V
3.3BUF
+5.2V
+5.2buf
+VCC
+5.2V_RTN
+3.4V_RTN
3.3buf
ISPRI
ILIM1
5.1VREF
2.5V_1

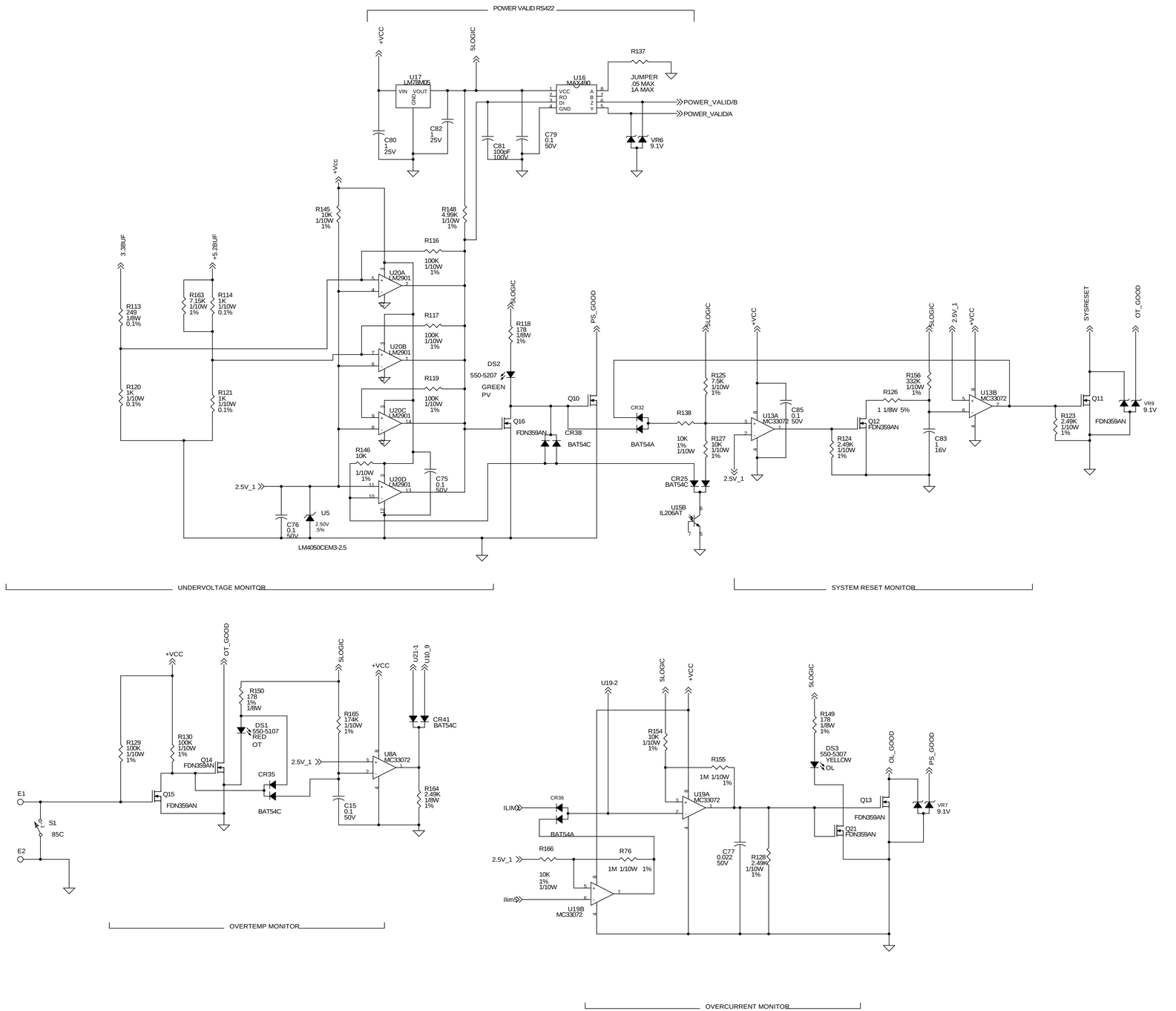
POWER VALID RS422
+VCC
5LOGIC
U17
LM78M05
VIN
VOUT
GND
C80
1
25V
C82
1
25V
C81
100nF
100V
C79
0.1
50V
U16
MAX490
VCC
RO
DI
GND
A
B
Z
Y
R137
JUMPER
.05 MAX
1A MAX
POWER_VALID/B
POWER_VALID/A
VR6
9.1V
R145
10K
1/10W
1%
R148
4.99K
1/10W
1%
R116
100K
1/10W
1%
R117
100K
1/10W
1%
R119
100K
1/10W
1%
U20A
LM2901
U20B
LM2901
U20C
LM2901
U20D
LM2901
3.38UF
+5.28UF
R113
249
1/8W
0.1%
R163
7.15K
1/10W
1%
R114
1K
1/10W
0.1%
R120
1K
1/10W
0.1%
R121
1K
1/10W
0.1%
R146
10K
1/10W
1%
C75
0.1
50V
2.5V_1
C76
0.1
50V
U5
2.50V
5%
LM4050CEM3-2.5
UNDERVOLTAGE MONITOR
R118
178
1/8W
1%
DS2
550-5207
GREEN
PV
Q16
FDN359AN
CR38
BAT54C
Q10
PS_GOOD
CR32
BAT54A
R138
10K
1%
1/10W
R125
7.5K
1/10W
1%
R127
10K
1/10W
1%
CR25
BAT54C
U15B
IL206AT
U13A
MC33072
C85
0.1
50V
R126
1 1/8W 5%
Q12
FDN359AN
R124
2.49K
1/10W
1%
R156
332K
1/10W
1%
C83
1
16V
U13B
MC33072
SYSRESET
OT_GOOD
Q11
FDN359AN
R123
2.49K
1/10W
1%
VR9
9.1V
SYSTEM RESET MONITOR

+VCC
OT_GOOD
5LOGIC
+VCC
U21-1
U10_9
R150
178
1%
1/8W
DS1
550-5107
RED
OT
R165
1.74K
1/10W
1%
CR41
BAT54C
R129
100K
1/10W
1%
R130
100K
1/10W
1%
Q14
FDN359AN
2.5V_1
U8A
MC33072
CR35
BAT54C
R164
2.49K
1/8W
1%
C15
0.1
50V
E1
Q15
FDN359AN
S1
85C
E2
OVERTEMP MONITOR

U19-2
5LOGIC
+VCC
5LOGIC
R149
178
1/8W
1%
R154
10K
1/10W
1%
R155
1M 1/10W 1%
DS3
550-5307
YELLOW
OL
OL_GOOD
PS_GOOD
U19A
MC33072
CR36
ILIM
BAT54A
Q13
FDN359AN
Q21
FDN359AN
VR7
9.1V
2.5V_1
R166
10K
1%
1/10W
R76
1M 1/10W 1%
C77
0.022
50V
R128
2.49K
1/10W
1%
Ilim5
U19B
MC33072
OVERCURRENT MONITOR